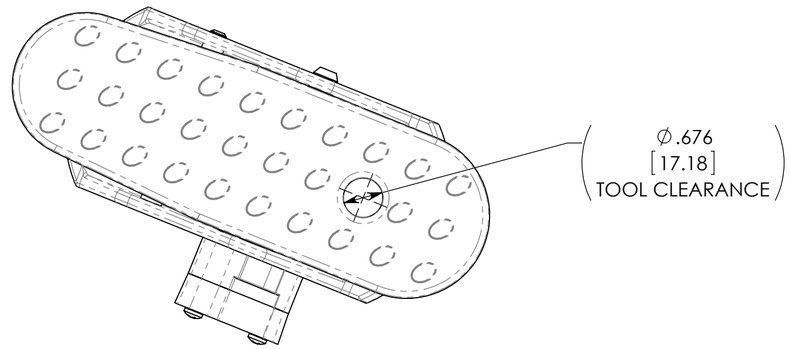

VIEW A-A

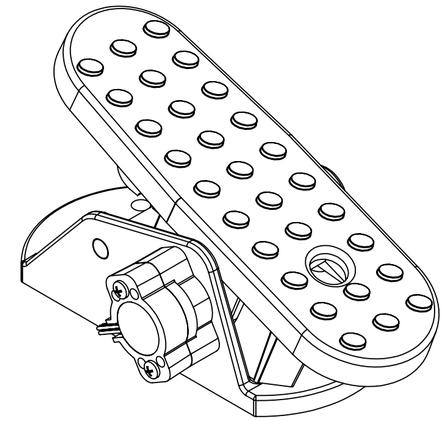

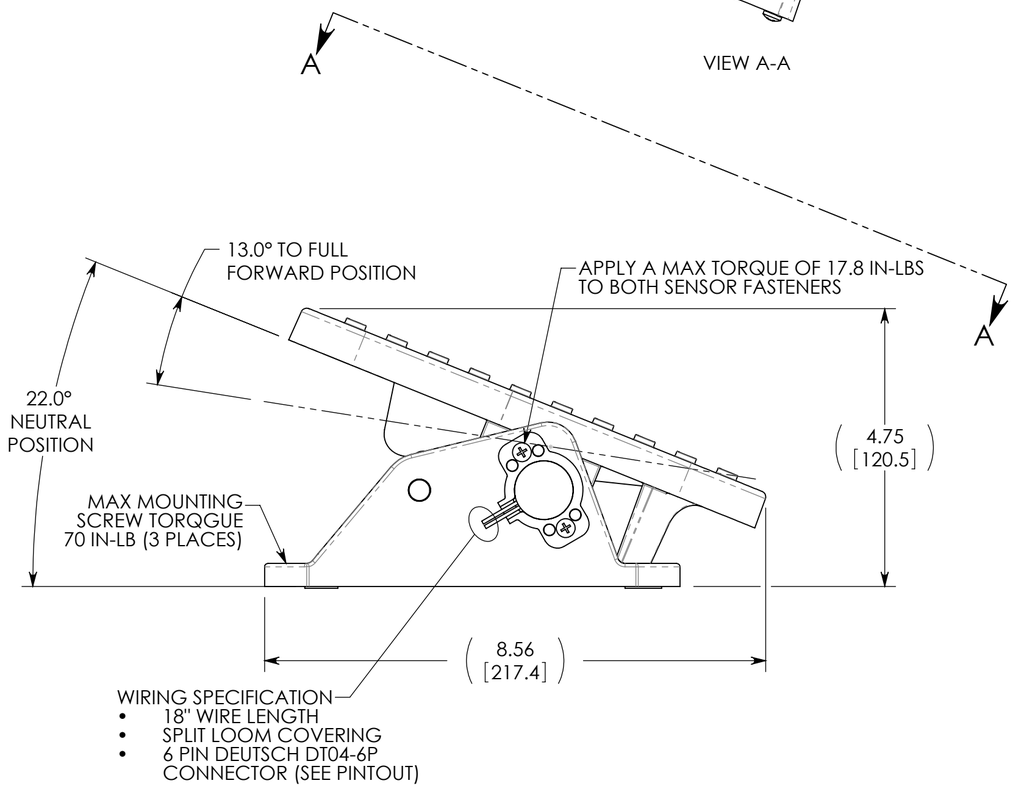

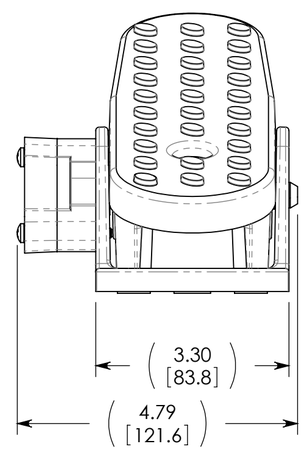

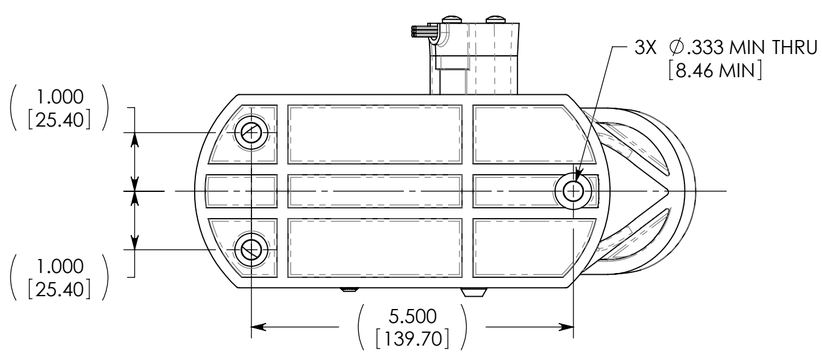

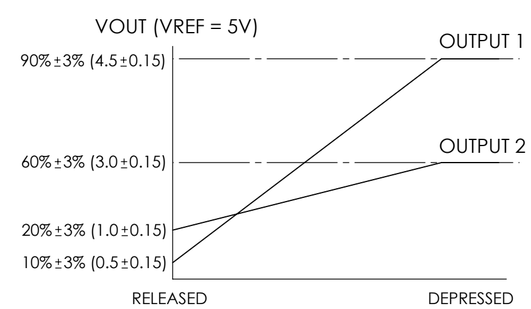

PEDAL SENSOR ELECTRICAL OUTPUT

UNITS IN inch [millimeter]

PART #
10463